3.0-3.5 TON 4-WHEEL ELECTRIC FORKLIFT MAST

Type	Model	Lift Height (mm)	Load Capacity (kg)		Overall Height (mm) 3.0-3.5t			Free Lift (mm) 3.0-3.5t		Tilt Angle F/R(deg)
					Mast Lowered	Mast Extended		Mast Extended		
			3t	3.5t		With Backrest	Without Backrest	With Backrest	Without Backrest	
Wide view 2-stage mast	M200	2000	3000	3500	1650	3160	2660	-	-	6/12
	M250	2500	3000	3500	1900	3660	3160	-	-	6/12
	M300	3000	3000	3500	2150	4160	3660	-	-	6/12
	M330	3300	3000	3500	2300	4460	3960	-	-	6/12
	M350	3500	3000	3500	2400	4660	4160	-	-	6/12
	M370	3700	3000	3500	2500	4860	4360	-	-	6/12
	M400	4000	2950*3000	3200*3500	2700	5160	4660	-	-	6/12
	M450	4500	2750*3000	3000*3050	2950	5660	5160	-	-	6/6
	M500	5000	2400*2550	2500*2850	3200	6160	5660	-	-	6/6
	M550	5500	2250*2400	2300*2500	3500	6660	6160	-	-	3/6
	M600	6000	1500*2200	1800*2300	3750	7160	6660	-	-	3/6
Full free 2-stage mast	Z200	2000	3000	3500	1570	3050	2620	470	865	6/12
	Z250	2500	3000	3500	1820	3550	3120	720	1115	6/12
	Z300	3000	3000	3500	2070	4050	3620	970	1365	6/12
	Z330	3300	3000	3500	2220	4350	3920	1120	1515	6/12
	Z350	3500	3000	3500	2320	4550	4120	1220	1615	6/12
	Z370	3700	3000	3500	2420	4750	4320	1320	1715	6/12
	Z400	4000	2900*3000	3300*3500	2620	5050	4620	1820	1965	6/12
Full free 3-stage mast	S370	3700	2900	3500	1895	4870	4410	695	1155	6/12
	S400	4000	2900	3500	1995	5170	4710	795	1255	6/6
	S435	4350	2800*2900	3000*3300	2110	5520	5060	910	1370	6/6
	S450	4500	2700*2800	2900*3100	2160	5670	5210	960	1420	6/6
	S480	4800	2500*2800	2600*2900	2260	5970	5510	1060	1520	6/6
	S500	5000	2300*2550	2400*2800	2325	6170	5710	1130	1590	6/6
	S550	5500	2200*2400	2300*2500	2525	6670	6210	1335	1795	3/6
	S600	6000	1500*2100	1550*2200	2695	7170	6710	1465	1925	3/6

4-WHEEL ELECTRIC FORKLIFT 3.0-3.5 TON
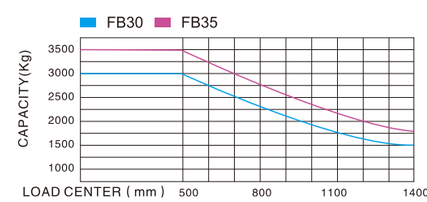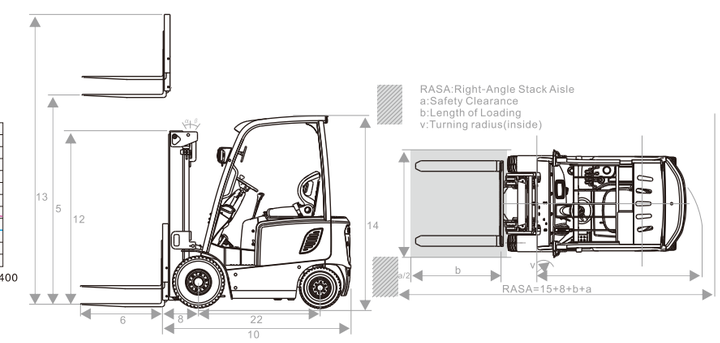
		Model			FB30	FB35
General	2	Power Type			Electric	Electric
	3	Rated Capacity		kg	3000	3500
	4	Load Centre		mm	500	500
Characreristic&Dimension	5	Lift Height		mm	3000	3000
	6	Fork Size	L×W×T	mm	1070×125×45	1070×125×50
	7	Mast Tilt Angle	F/R	Deg	6°/12°	6°/12°
	8	Front Overhang (Wheel center to fork face)		mm	480	480
	9	Tread	F/R	mm	1000/980	1000/980
	10	Ground Clearance (Bottom of mast)		mm	120	120
	11	Fork Spread	Min. / Max.	mm	250/1100	250/1100
	12	Overall Dimension	Length to face of fork(Without fork)	mm	2560	2560
	13		Overall Width	mm	1230	1230
	14		Mast Lowered Height	mm	2120	2120
	15		Mast Extended Height(With backrest)	mm	4160	4160
	16		Overhead Guard Height	mm	2250	2250
	17	Turning Radius (outside)		mm	2315	2315
	18	Min. insecting aisle		mm	2425	2425
Performance	19	Speed	Travel (Empty load)	km/h	15	15
	20		Lifting(Full load)	mm/s	300	280
	21	Max.Gradeability		%	15	15
Chassis	22	Tire	Front		28×9-15-12PR	28×9-15-12PR
	23		Rear		18×7-8-14 PR	18×7-8
	24	Wheelbase		mm	1710	1710
	25	Service weight		kg	5100	5350
Power&Transimission	26	Motor	Drive Motor	kw	15	15
	27		Lift Motor	kw	12	12
	28	Battery	Voltage/Capacity	V/Ah	80/500	80/550
	29	Controller	Manufacturer		CURTIS	CURTIS
	30		Type		AC	AC
	31	Operating Pressure for Attachment		Mpa	17.5	17.5